CUI Devices is now Same Sky! Learn More

MODEL: PJ-202A | DESCRIPTION: DC POWER JACK

FEATURES

- 2.0 mm center pin
- 2.5 A rating
- right-angle orientation
- through hole
- kinked pins

SPECIFICATIONS

parameter	conditions/description	min	typ	max	units
rated input voltage			24		Vdc
rated input current				2.5	A
contact resistance				30	mΩ
insulation resistance	at 500 Vdc	100			MΩ
voltage withstand	for 1 minute			500	Vac
insertion/withdrawal force		0.3		3	kg
terminal strength	any direction for 10 seconds			500	g
operating temperature		-25		85	°C
life			5,000		cycles
flammability rating	UL94V-0				
RoHS	yes				

SOLDERABILITY

parameter	conditions/description	min	typ	max	units
wave soldering	dipped in solder pot for 5 ±0.5 seconds	255	260	265	°C

MECHANICAL DRAWING

units: mm
tolerance:
X ±0.50 mm
X.X ±0.30 mm
X.XX ±0.20 mm
PCB: ±0.05 mm
unless otherwise specified

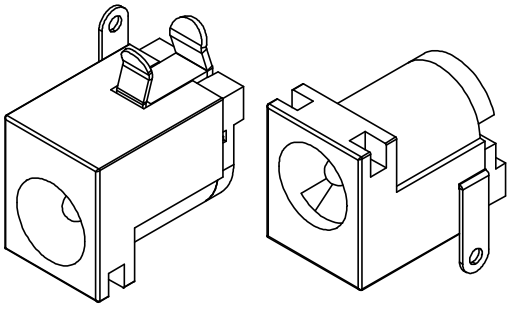

DESCRIPTION	MATERIAL	PLATING/COLOR
center pin	copper	nickel
terminal 1	brass	silver
terminal 2	copper alloy	silver
terminal 3	brass	silver
housing	PBT (UL94V-0)	black
cover	PBT (UL94V-0)	black

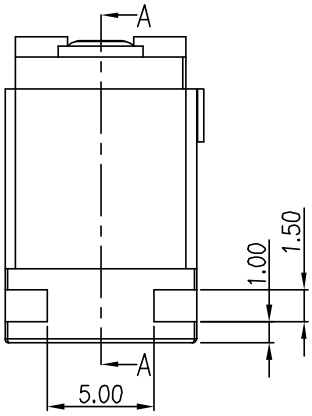

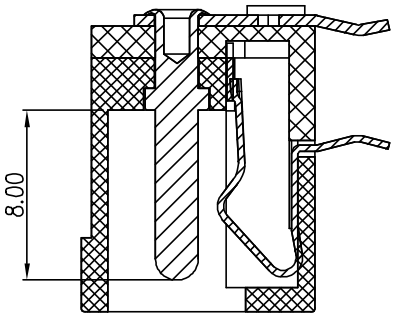

SEC: A–A

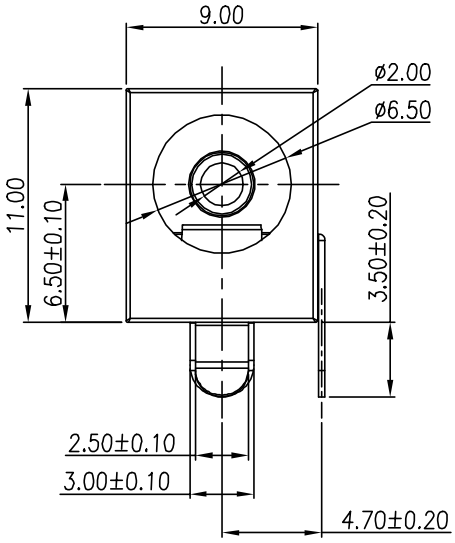

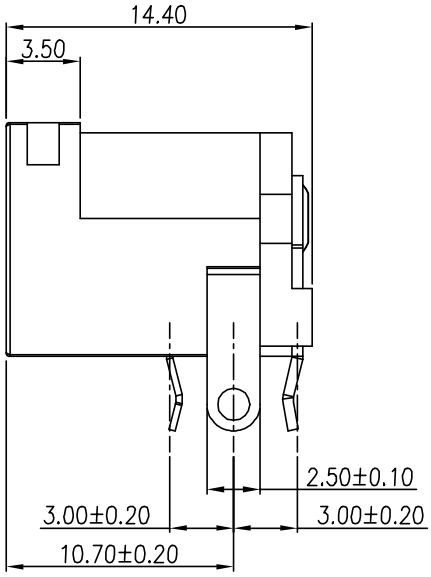

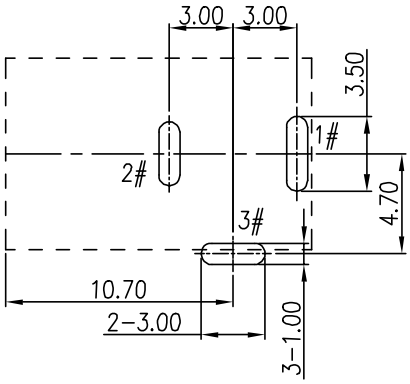

Recommended PCB Layout
Top View

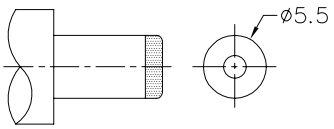

MATING PLUG
Jack Insertion Depth: 9.0 mm

SCHEMATIC	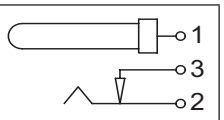
Model	PJ-202A
Center Pin	Ø2.0 mm

REVISION HISTORY

rev.	description	date
1.0	initial release	11/17/2005
1.01	applied new spec template	01/08/2015
1.02	increased voltage rating	04/21/2016
1.03	brand update	10/30/2019
1.04	CUI Devices rebranded to Same Sky	09/12/2024
1.05	changed terminal plating to be silver	03/11/2025
1.06	updated datasheet	07/11/2025

The revision history provided is for informational purposes only and is believed to be accurate.

Same Sky offers a one (1) year limited warranty. Complete warranty information is listed on our website.

Same Sky reserves the right to make changes to the product at any time without notice. Information provided by Same Sky is believed to be accurate and reliable. However, no responsibility is assumed by Same Sky for its use, nor for any infringements of patents or other rights of third parties which may result from its use.

Same Sky products are not authorized or warranted for use as critical components in equipment that requires an extremely high level of reliability. A critical component is any component of a life support device or system whose failure to perform can be reasonably expected to cause the failure of the life support device or system, or to affect its safety or effectiveness.